45° SKEW VARIABLE BRIDGE WIDTH 2:1 FILL SLOPES WINGS SKEWED 50% FROM ROADWAY TO BREASTWALL

ABUTMENT SKEW CORRECTION FACTOR (SCF) = 1.414

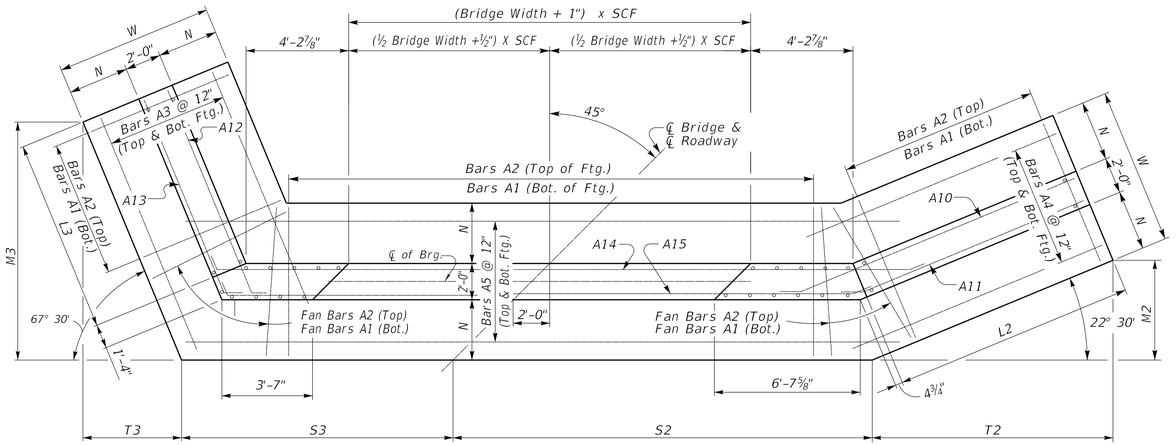

(Left Skew as shown;right skew opp. hand)

PLAN

NOTE: Trim A16 & A17 bars if necessary

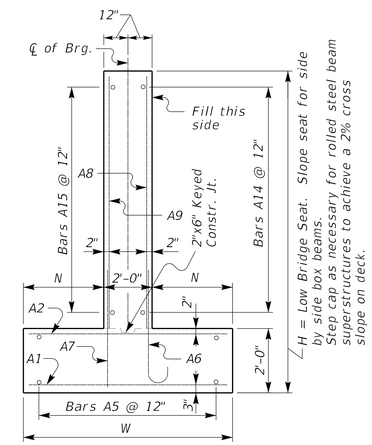

WALL SECTION

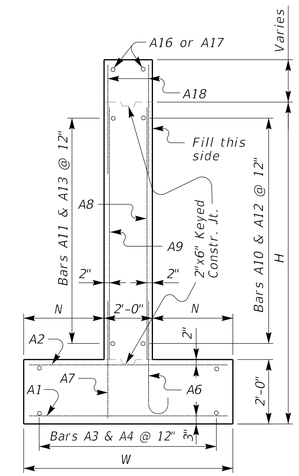

WING SECTION

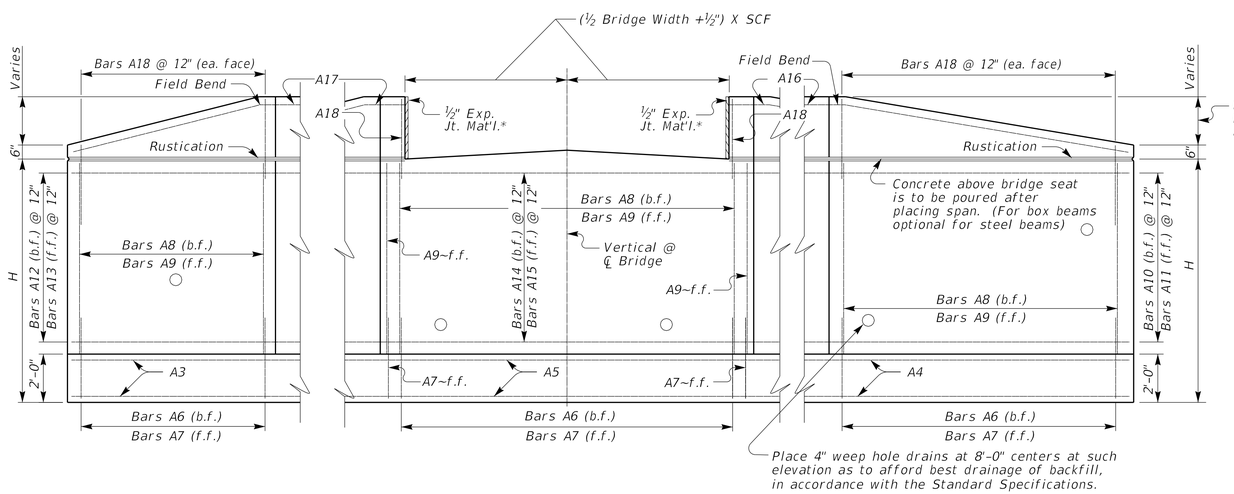

ELEVATION

*Expansion Joint Material:
AASHTO M153
Type-I Sponge Rubber

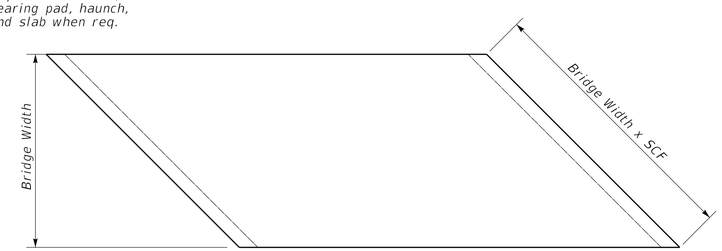

PLAN OF SUPERSTRUCTURE SLAB

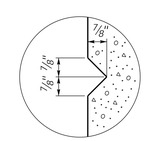

RUSTICATION GROOVE

REVISION DATE: 08/11/2025
REVISION NUMBER: 0

SUBMITTED Michael Cornett 08-11-2025
DIVISION DIRECTOR DATE

APPROVED Jason Bellinger 08-11-2025
STATE HIGHWAY ENGINEER DATE

BRIDGE STANDARDS

COMMONWEALTH OF KENTUCKY
DEPARTMENT OF HIGHWAYS

45° SKEW SUPPORT VARIABLE WIDTH ABUTMENT 50% SKEWED WINGS

STANDARD DRAWING NUMBER
BSA-019-01

OpenRoads Designer v23.00.01.11